PARTS CATALOGUE

Challenger 150 cc

一、仪表、仪表罩 SPEEDOMETER

NO：01

NO.	Part NO.	Description	Description in English	Qty	Remark
1	010001	后仪表壳	COVER of SPEEDOMETER,REAR	1	
2	010002	仪表	SPEEDOMETER	1	
3	010003	前仪表壳	COVER of SPEEDOMETER,FRONT	1	
4	010004	前左转向灯	TURNING LIGHT,LEFT	1	
5	010005	前右转向灯	TURING LIGHT,RIGHT	1	
6	010006	防雾灯	FRONT PROTECTING LIHGT	1	
7	010007	碟刹窗盖板	COVER,DISK BRAKE	1	
8	010008	前装饰灯灯泡	BULB OF FRONT PROTECTING LIGHT	1	
9	010009	前装饰灯线	CABLE OF FRONT PROTECTING LIGHT	1	
10	010010	垫圈Φ6×Φ16	WASHERΦ6×Φ16	4	
11	010011	平头螺钉M5×16	SCREW M5×16	4	
12	010012	自攻螺钉ST4.2×12	SELF-TAPPINGSCREW ST4.2×12	22	
13	010013	十字中扁头螺钉M6×12	SCREW M6×12	4	

二、前面板 FRONT COVER

NO：02

NO.	Part NO.	Description	Description in English	Qty	Remark
1	020001	前帽沿	FRONT PLASTIC PLATE	1	
2	020002	前面板	FRONT COVER	1	
3	020003	前大灯	HEADLIGHT	1	
4	020004	前面板装饰框	Decorative box front panel	1	
5	020005	前面板网罩	Front panel mesh mask	1	
6	020006	内六角圆柱头螺栓M6×16	BOLT M6×16	1	
7	020007	垫片Φ6×Φ12	WASHERΦ6×Φ12	1	
8	020008	自攻螺钉ST4.2×16	SELF-TAPPING SCREW ST4.2×16	13	
9	020009	自攻螺钉ST4.2X12	SELF-TAPPING SCREW ST4.2×12	4	

三、载物架组件 **REAR RACK** **NO：03**

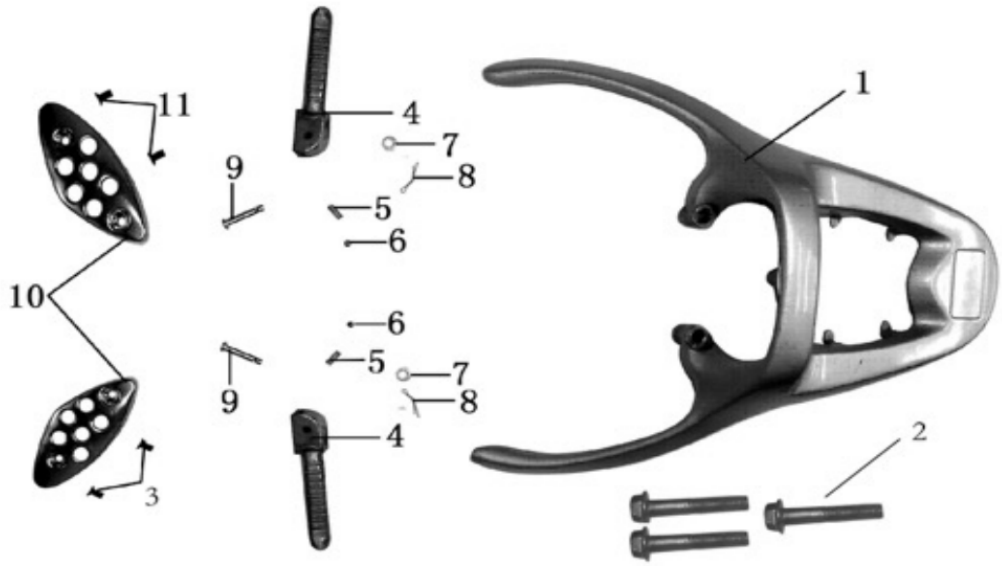

NO.	Part NO.	Description	Description in English	Qty	Remark
1	030001	载物架	REAR RACK	1	
2	030002	内六角螺栓M8X45	BOLT M8X45	3	
3	030003	平头螺钉M6×12	SCREW M6×12	4	
4	030004	左右脚蹬	PEDAL	2	
5	030005	弹簧	SPRING	2	
6	030006	滚珠Φ6	UPPER BALLΦ6	2	
7	030007	垫片Φ6×Φ12	WASHERΦ6×Φ12	2	
8	030008	脚蹬销	PIN	2	
9	030009	脚蹬轴6×32	AXLE	2	
10	30010	装饰片	PROTECTING PLATE	2	

四、后尾灯组件 TAILLIGHT　　NO：04

NO.	Part NO.	Description	Description in English	Qty	Remark
1	040001	尾灯	TAILLIGHT	10	
2	040002	后左转向灯	REAR TURN LIGHT,LEFT	5	
3	040003	后右转向灯	REAR TURN LIGHT,RIGHT	5	
4	040004	后泥板	REAR FENDER	6	
5	040005	后内挡泥板	FENDER OF WHEEL	4	
6	040006	后尾灯灯泡	BULB OF TAILLIGHT	2	
7	040007	后回复反射器	REFlECTOR	4	
8	040008	垫片	WASHER	2	
9	040009	六角法兰面螺母M6	HEXAGON BOLT	2	

五、锁类 ALL LOCK　　NO：05

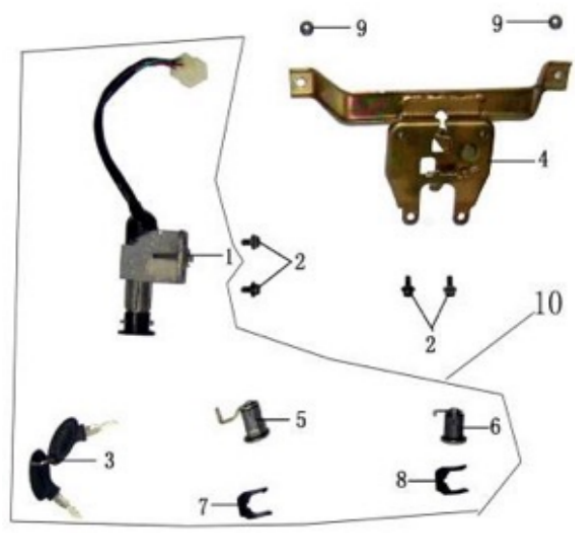

NO.	Part NO.	Description	Description in English	Qty	Remark
1	050001	点火开关	IGNITION LOCK	2	
2	050002	六角法兰面螺栓M6×12	HEXAGON M6×12	4	
3	050003	钥匙	KEY	2	
4	050004	座垫锁架	BRACKET OF SEAT LOCK	2	
5	050005	座垫锁	SEAT LOCK	1	
6	050006	工具箱锁	LOCK OF LUGGAGE	1	
7	050007	座垫锁板	SEAT LOCK PLATE	2	
8	050008	工具箱锁卡板	CLIP OF LUGGAGE	2	
9	050009	六角法兰面螺母M6	HEXAGON BOLT	2	

10	50009	套锁组件

六、左、右装饰板 **PROTECTIN** **IO：06**

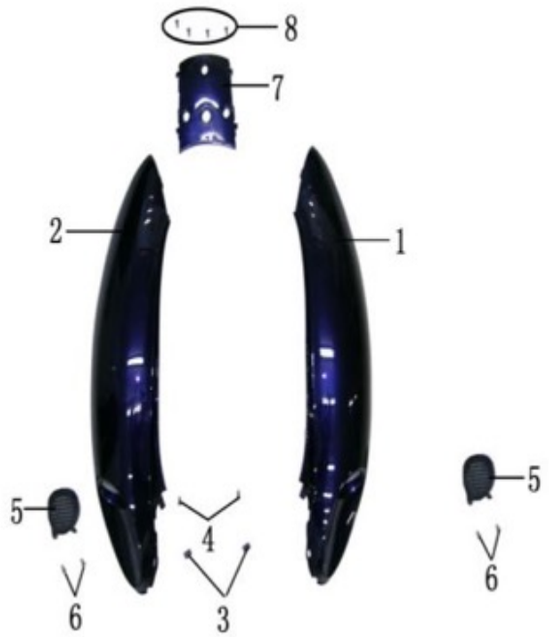

NO.	Part NO.	Description	Description in English	Qty	Remark
1	060001	左装饰板	PROTECTING PLATE LEFT	1	
2	060002	右装饰板	PROTECTING PLATE RIGHT	1	
3	060003	夹片	CLIP	2	
4	060004	自攻螺钉ST4.2×12	SELT-TAPPING SCREW ST4.2×12	2	
5	060005	左右装饰板风隔	AIRWAY OF PROTECTING	2	
6	060006	自攻螺钉ST4.2×12	SELF-TAPPING SCREW ST4.2×12	4	
7	060007	后装饰板			
8	060008	自攻螺钉ST4.2×12			

七、脚踏板组件 **FOOT BO** **NO：07**

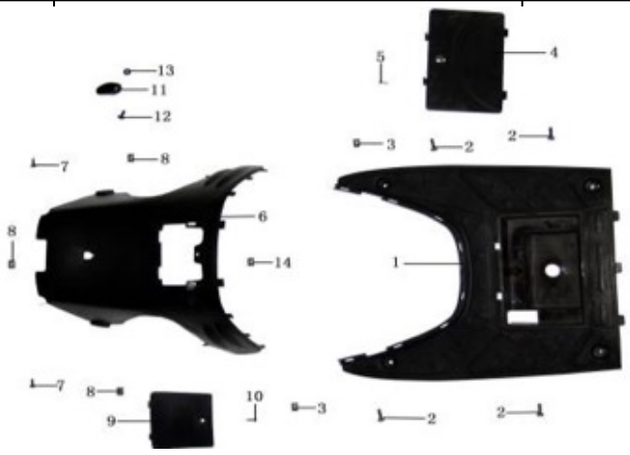

NO.	Part NO.	Description	Description in English	Qty	Remark
1	070001	脚踏板	FOOT BOARD	1	
2	70002	六角法兰面螺栓M6×20	BOLT M6×20	4	
3	070003	夹片	CLIP	2	
4	070004	电瓶盖	COVER OF BATTERY	1	
5	70005	自攻螺钉ST4.8×12	SELF-TAPPING SCREW ST4.8×12	2	
6	70006	杂物箱前罩	FRONT COVER OF LUGGAGE	1	
7	70007	自攻螺钉ST4.8×16	SELF-TAPPING SCREW ST4.8×16	2	
8	70008	夹片	CLIP	3	
9	70009	杂物箱前罩小盖	COVER OF BATTERY	1	
10	70010	自攻螺钉ST4.8×16	SELF-TAPPING SCREW ST4.8×16	2	
11	700011	头盔挂钩	HELMET HOOK	2	
12	0700012	十字中扁头M6×16	SCREW M6×16	2	
13	700013	六角法兰面螺母M6×16	BOLT M6×16	2	
14	700014	夹板螺母M6			

八、工具箱组件 **FRONT LUGGA** **NO：09**

NO.	Part NO.	Description	Description in English	Qty	Remark
1	080001	工具箱	TOOL BOX	1	
2	080002	工具箱盖	COVER OF TOOL BOX	1	
3	080003	工具箱盖挂钩	HOOK, COVER OF TOOL BOX	2	
4	080004	自攻螺钉ST3.8×12	SELF-TAPPING SCREW ST3.8×12	4	
5	080005	六角法兰面螺栓M6×12	HEXAGON BOLT M6×12	2	
6	080006	自攻螺钉ST3.8×16	SELF-TAPPING SCREW ST3.8×16	4	
7	080007	车架档泥板	FENDER OF VEHICLE	8	
8	080008	六角法兰面螺栓M6×12	HEXAGON BOLT M6×12	4	
9	080009	六角法兰面螺母M6	BOLT M6	8	
10	80010	号码盖	NUMBER COVER	2	

九、 0

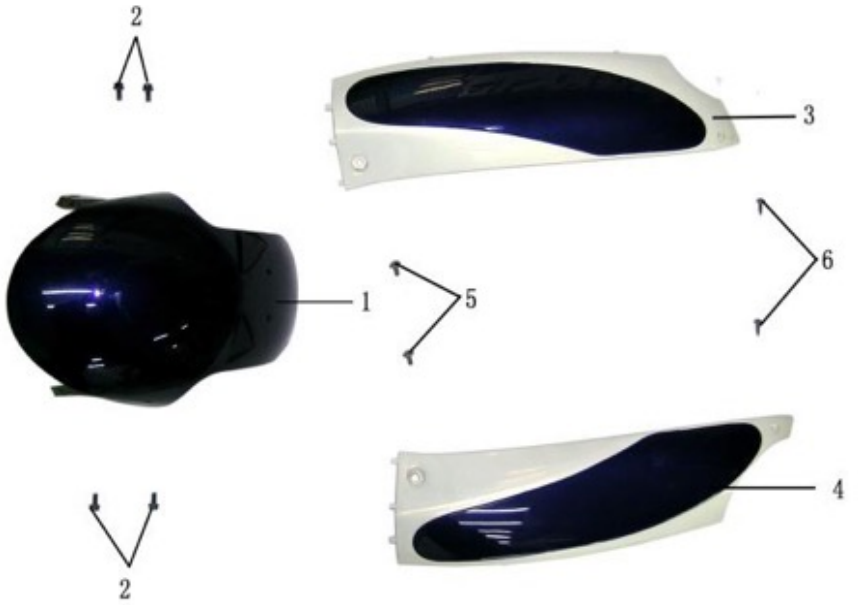

NO.	Part NO.	Description	Description in English	Qty	Remark
1	090001	前轮泥板	FRONT FENDER	1	
2	090002	六角法兰面螺栓M6×12	HEXAGON BOLT M6×12	4	
3	090003	左护条	PLASTIC PLATE,LEFT	1	
4	090004	右护条	PLASTIC PLATE,RIGHT	1	
5	090005	十字中扁头M6×12	BOLT M6×12	2	
6	090006	自攻螺钉ST4.8×16	SELF-TAPPING SCREW ST4.8×16	2	

十、

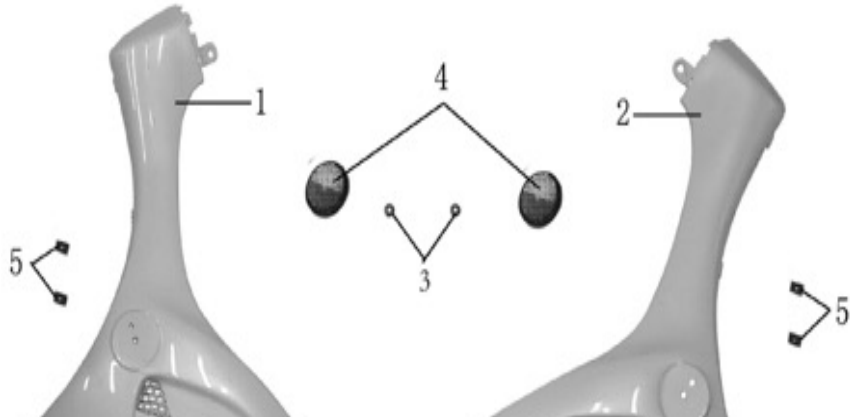

NO.	Part NO.	Description	Description in English	Qty	Remark
1	100001	左前护板	FRONT SHIELD ,LEFT	1	
2	100002	右前护板	FRONT SHIELD ,RIGHT	1	
3	100003	六角法兰面螺母M6	HEXAGON BOLT M6	2	
4	100004	左右侧反射器	REFLECTOR,LEFT/RIGHT	1	
5	100005	夹片	CLIP	4	
6	100006	十字中扁头M6×16	BOLT M6×16	4	

十一、空滤器总成： **AIR CLEANER** **NO：12**

NO.	Part NO.	Description	Description in English	Qty	Remark
1	110001	空滤器内盖	Air-cleaner cover top	1	
2	110002	空滤器滤芯	Air-filter element	1	
3	110003	接管卡扣	Clip	1	
4	110004	ST4.8×16自攻螺钉	Self-tapping screw ST4.8×16	2	
5	110005	ST4.8×16自攻螺钉	Self-tapping screw ST4.8×16	4	
6	110006	空滤器外盖	Air-cleaner cover below	1	
7	110007	六角法兰面螺栓M6×25	Hexagon bolt M6×25	2	
8	110008	化油器	Carburetor	1	

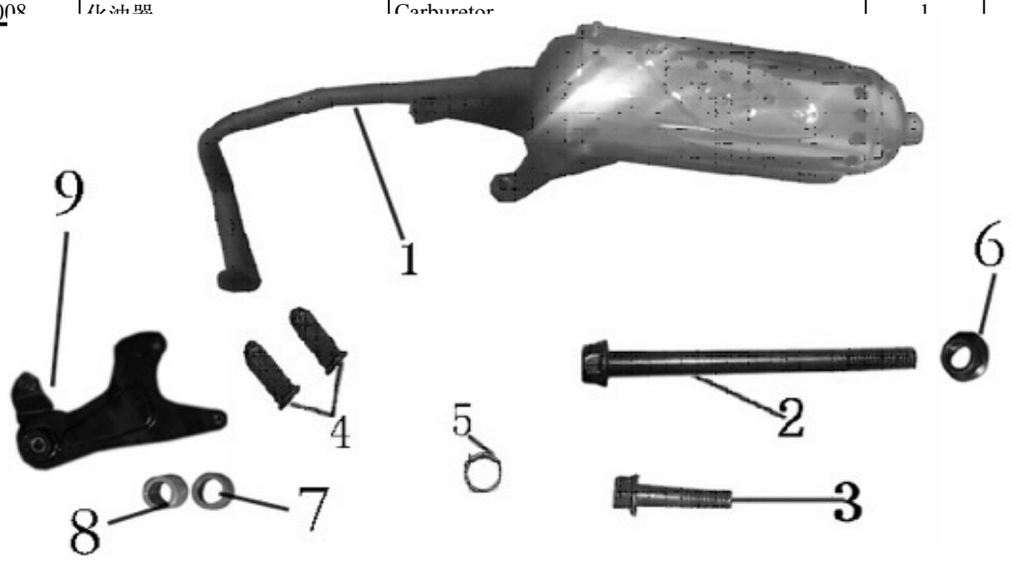

NO.	Part NO.	Description	Description in English	Qty	Remark
1	120001	消声器	Muffler	1	
2	120002	六角法兰螺栓M8×80	HEXAGON BOLT M8×80	1	
3	120003	六角法兰螺栓M8×48	HEXAGON BOLT M8×48	1	
4	120004	盖形螺母M6	M6 cap-shaped nut	2	
5	120005	消声器排气口密封垫	Gasket,muffler	1	
6	120006	螺母M19	Screw nut M19	1	
7	120007	后轮内衬套 Φ26×Φ19×28	Bush		
8	120008	后轮外衬套 Φ26×Φ19×16	Bush		
9	120009	动力连接板	Conn		

十三、方向把总成 **HANDLEBAI** **14**

NO.	Part NO.	Description	Description in English	Qty	Remark
1	130001	方向把	HANDLE BAR	1	
2	130002	左手把开关前盖	FRONT COVER, LEFT HANDLEBAR SWITCH	1	
3	130003	左手把开关后盖	REAR COVER, LEFT HANDLEBAR SWITCH	1	
4	130004	右手把开关前盖	FRONT COVER, RIGHT HANDLEBAR SWITCH	1	
5	130005	右手把开关后盖	REAR COVER, RIGHT HANDLEBAR SWITCH	1	
6	130006	六角法兰面螺栓M10×50	HEXAGON BOLT M10×50	1	
7	130007	六角法兰面自锁螺母M10	SELFT-TAPPING BOLT M10	1	
8	130008	方向把安装衬套	BUSHING	1	
9	130009	十字槽盘头螺钉M5×30	SCREW M5×30	2	
10	130010	十字槽盘头螺钉M5×20	SCREW M5×20	2	
11	130011	左刹车握把	LEFT HANDLEBAR	1	
12	130012	油门转把	Right grip	1	
13	130013	后刹手柄	REAR BRAKE LEVER	1	
14	130014	后刹手柄专用螺栓M5×22	BOLT M5×22	1	
15	130015	弹簧垫片Φ5	SPRING WASHERΦ5	1	
16	130016	六角头螺母M5	HEXAGON NUT M5	1	
17	130017	左后视镜 4号	MIRROR,LEFT	1	
18	130018	右后视镜	MIRROR,RIGHT	1	
19	130019	刹车灯开关	SWITCH,BRAKE LIGHT	1	
20	130020	平头螺钉M5×12	SCREW M5×12	1	
21	130021	左把手护盖	COVER OF HANDLEBAR,LEFT	1	
22	130022	右把手			
23	130023	自攻螺			

十四、座 **17**

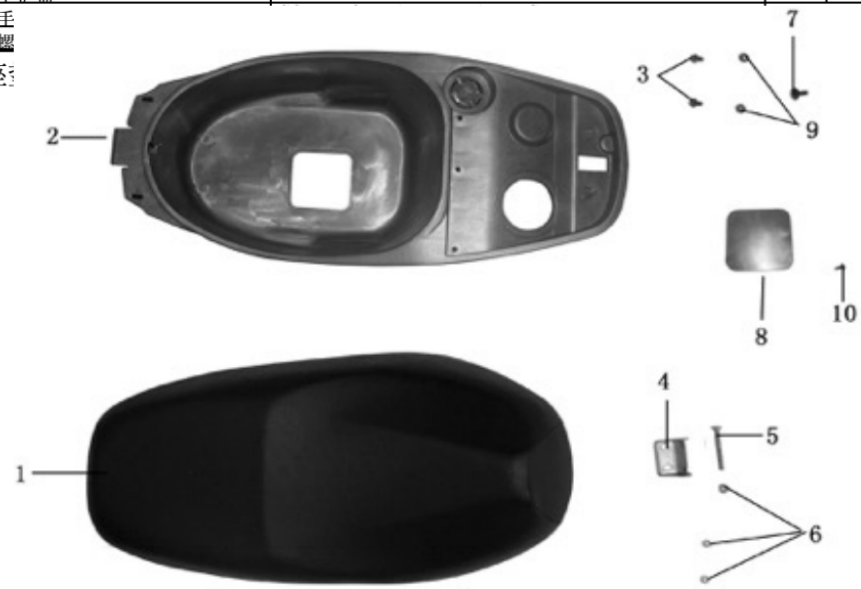

NO.	Part NO.	Description	Description in English	Qty	Remark
1	140001	座垫	SAET ASSY	1	
2	140002	杂物箱	LUGGAGE BOX	1	
3	140003	六角法兰面螺栓M6×12	HEXAGON BOLT M6×12	2	
4	140004	座垫摇臂	SEAT ROCKET	1	
5	140005	座垫销轴	SEAT CLIP	1	
6	140006	六角法兰面螺母M6	HEXAGON BOLT M6	3	
7	140007	十字大扁头螺钉M6×20	SCREW M6×20	1	
8	140008	杂物箱内罩			
9	140009	六角头螺母M6			
10	140010	自攻螺钉ST4.8×12			

十五、油箱**FUEL TANK**

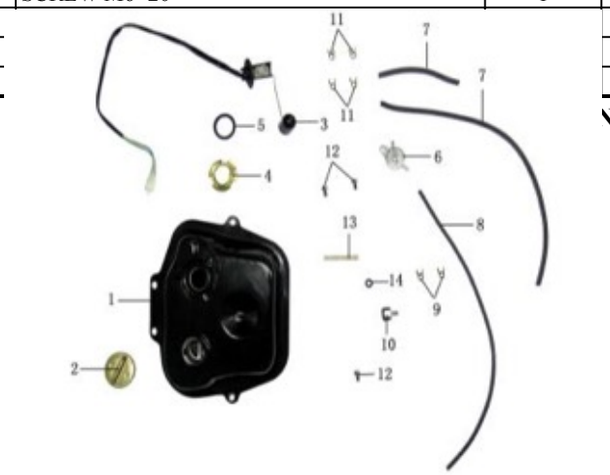

NO：17

NO.	Part NO.	Description	Description in English	Qty	Remark
1	150001	油箱	FUEL TANK	1	
2	150002	油箱盖	COVER,FUEL BOX	1	
3	150003	燃油位传感器	FUEL SENSOR	1	
4	150004	传感器压板	PLATE, FUEL SENSOR	1	
5	150005	传感器垫圈	WASHER, FUEL SENSOR	1	
6	150006	燃油开关	PETROLIC SWITCH	1	
7	150007	油管	FUEL TUBE	1	
8	150008	负压管	GAS TUBE	1	
9	150009	卡簧	CLIP SPRING	4	
10	150010	出油口螺母	NUT ,OUT OIL	1	
11	150011	卡簧	CLIP SPRING	10	
12	150012	六角法兰面螺栓M6×12	HEXAGON BOLT M6×12	3	
13	150013	出油口滤网		1	
14	150014	出油口滤网垫		1	

十六、车架及附件

NO：19

NO.	Part NO.	Description	Description in English	Qty	Remark
1	160001	车架	VEHICLE FRAME	1	
2	160002	动力吊架	ENGINE HANGER	1	
3	160003	六角法兰面螺栓M10×50	HEXAGON BOLT M10×50	2	
4	160004	动力吊架轴M10×185dr	CENTER STAND M10×185	1	
5	160005	六角法兰面自锁螺母M10	HEXAGON BOLT M10	1	
6	160006	主支架	CENTER STAND	1	
7	160007	六角法兰面螺栓M10×25	HEXAGON BOLT M10×25	2	
8	160008	主支架衬套	BUSHING,CENTER STAND	2	
9	160009	主支架拉簧	SPRING CENTER STAND	1	
10	160010	六角法兰面螺栓M6×25	BOLT M6×25	1	
11	160011	主支架缓冲块	BUFFER OF CENTER STAND	1	
12	160012	侧支架	SIDE STAND	1	
13	160013	侧支架拉簧	SPRING OF SIDE STAND	1	
14	160014	侧支架台阶螺栓	BOLT OF SIDE STAND	1	

15	160015	动力吊架轴	Engine fran		
16	160016	垫片	gasket		
17	160017	开口销	cotter pin		

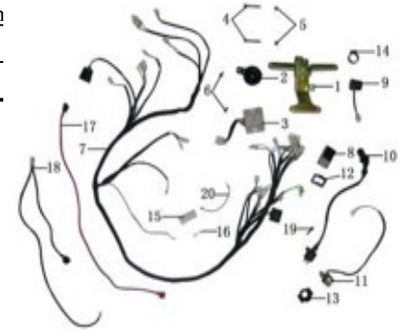

十七、电 ECTRICAL ASSY 21

NO.	Part NO.	Description	Description in English	Qty	Remark
1	170001	喇叭支架	BRACKET,HORN	1	
2	170002	喇叭	HORN	1	
3	170003	稳压器	RECTIFIER	1	
4	170004	六角法兰面螺栓 M6×55	HEXAGON BOLT M6×55	1	
5	170005	六角法兰面螺母M6	HEXAGON BOLT M6	1	
6	170006	六角法兰面螺栓M6×16	HEXAGON BOLT M6×16	1	
7	170007	主电缆	MAIN CABLE	1	
8	170008	点火器	CDI ASSY	1	
9	170009	闪光器	FLASHER	1	
10	170010	高压包	HIGH-VOLTAGE LOOP ASSY	1	
11	170011	继电器	RELAY	1	
12	170012	点火器护套	JACKET,CDI	1	
13	170013	继电器护套	CAP RELAY ASSY	1	
14	170014	闪光器器护套	FLASHER CAP	1	
15	170015	保险丝座	FUSE BOX	1	
16	170016	保险丝	FUSE	1	
17	170017	正极线	+ CABLE OF FUSE	1	
18	170018	负极线	- CABI		
19	170019	六角法兰面螺栓M6×12	HEXA		
20	170020	保险丝线	FUSE		
21	170021	蓄电池	BATTE		

十八、前减震 FRONT ABSORBE 23

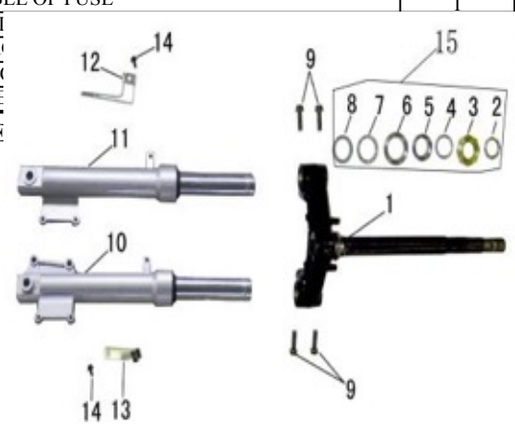

NO.	Part NO.	Description	Description in English	Qty	Remark
1	180001	方向柱	FRONT FORK	1	
2	180002	压紧螺母	LOCK NUT	1	
3	180003	上凸钢碗	UNDER COVER BEARING BOWL	1	
4	180004	滚珠	UPPER BALL	1	
5	180005	上凹钢碗	UNDER COVER BEARING BOWL	1	
6	180006	下凹钢碗	UPPER COVER BEARING BOWL	1	
7	180007	滚珠	UPPER BALL	1	
8	180008	下凸钢碗	UNDER COVER BEARING BOWL	1	
9	180009	六角法兰面螺栓 M8×48	HEXAGON BOLT M8×48	4	
10	180010	右前减震器	FRONT ABSORBER ASSY,RIGH	1	
11	180011	左前减震器	FRONT ABSORBER ASSY,LEFT	1	
12	180012	里程线夹	CLIP ,SPEEDOMETER	1	
13	180013				
14	180014				
15	180014				

NO.	Part NO.	Description	Description in English	Qty	Remark
NO	Part NO	Description	Description in English	数量Qty	PRICE
1	190001	后减震器	REAR ABSORBER ASSY	1	
2	190002	六角头螺栓M8×32	BOLT M8×32	2	
3	190003	后泥板左支架	BRACKET,REAR FENDER,LEFT	1	
4	190004	六角法兰面螺栓M10×40	HEXAGON BOLT M10×40	2	
5	190005	六角法兰面螺栓M6×12	HEXAGON BOLT M6×12	4	
6	190006	后泥板右支架	BRACKET,REAR FENDER,RIGHT	1	
7	190007	后铝轮热片	WASHER	1	
8	190008	六角法兰面自锁螺母M16	HEXAGON LOCK NUT M16	1	
9	190009	后轮圈	REAR WHEEL	0	
10	190010	后轮胎120/70-12	TYRE 120/70-12	0	
11	190011	气门嘴	CHARGE VALVE	0	
12	190012	气门嘴帽	CAP, CHARGE VALVE	0	
13	190013	后刹制动蹄块	REAR BRAKE SHOE	2	
14	190014	蹄块回位拉簧	SPRING, REAR BRAKE SHOE	2	
15	190015	后刹车摇臂	ARM,REAR BRAKE	1	
16	190016	后刹车凸轮轴	CAMSHAFT,REAR BRAKE	1	
17	190017	后刹车回位弹簧	SPRING,REAR BRAKE	1	
18	190018	O形圈	O RING	2	
19	190019	六角法兰面螺栓M6×32	HEXAGON BOLT M 6×32	1	
20	190020	后轮挡泥板	FENDER OF REAR WHEEL	1	
21	190021	后泥板防水皮	ANTI DIRT HUSK REAR FENDER	1	

二十、线

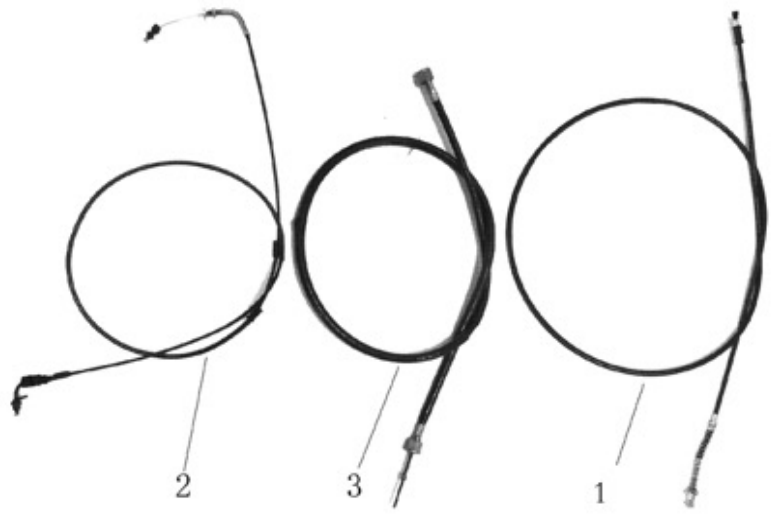

NO.	Part NO.	Description	Description in English	Qty	Remark
1	200001	后制动拉索(1900+40)mm	CABLE,REAR BRAKE (1900+40)mm	1	
2	200002				
3	200003				

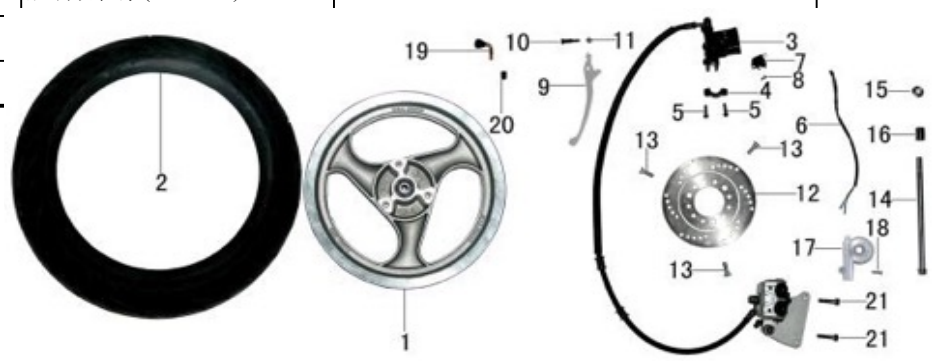

NO.	Part NO.	Description	Description in English	Qty	Remark
1	210001	前轮圈	FRNOT WHEEL	1	
2	210002	轮胎	TYRE	1	
3	210003	液压盘式制动器	DISK BRAKE ASSY	1	
4	210004	上泵压块	PLATE,DISK BRAKE UPPER PUMP	1	
5	210005	六角法兰面螺栓M6×20	HEXAGON BOLT M6×20	2	
6	210006	刹车灯线	CABLE,DISK BRAKE	1	
7	210007	刹车灯开关	SWITCH,BRAKE LIGHT	1	
8	210008	开关固定螺栓	SWITCH BOLT	1	
9	210009	制动手柄	BRAKE LEVER	1	
10	210010	六角头专用螺栓M6×25	BOLT M6×25	1	
11	210011	六角头螺母M6	HEXAGON NUT M6	1	
12	210012	碟刹盘	DISK BRAKE PANEL	1	
13	210013	液压盘固定螺栓	BOLT OF DISK BRAKE	3	
14	210014	前轮轴	FRONT AXLE	1	
15	210015	六角法兰面自锁螺母M12	HEXAGON NUT M12	1	
16	210016	前轮轴衬套	BUSHING,FRONT WHEEL	1	
17	210017	计速器	SPEED GEAR ASSY	1	
18	210018	十字槽沉头螺钉M5×16	SCREW M5×16	1	
19	210019	气门嘴	VALVE STEM	1	
20	210020	气门嘴帽	CAP,VALVE STEM	1	
21	210021	六角法兰面螺栓M8×30	HEXAGON BOLT M8×30	2	